In-Line Bodies for Screw-In Cartridge Valves

SB

p_{max} (AL) 250 bar (3600 PSI) • p_{max} (G) 350 bar (5080 PSI) • p_{max} (ST) 420 bar (6100 PSI)

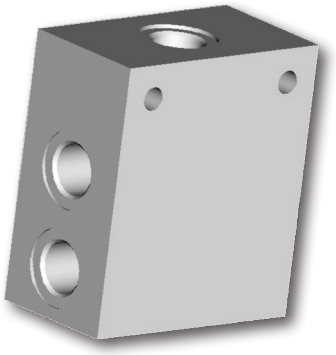

Technical Features

- In-line bodies designed to accommodate different cartridge valves and thus provide highly versatile solutions to hydraulic control functions
- Different valve functions in the same body are possible due to standardised cavities and valve housings across a wide range of cartridge valves
- Various cavities with SAE and ISO metric threads available
- Connecting ports for pipes with SAE and BSP threads available
- Bodies are available in aluminium, steel and cast iron. In the standard version, aluminium bodies are without surface treatment, steel bodies are zinc-coated for 240 h protection acc. to ISO 9227 and cast iron bodies are phosphated
- Cast iron body versions additionally feature a gauge port

Ordering Code

SB - ☐ - ☐ ☐ ☐ ☐ ☐ ☐ ☐ ☐ - ☐

In-Line Bodies for Screw-In Cartridge Valves

Cavity*

3/4-16 UNF-2B, 2-Way	(C-8-2)	**A2**
3/4-16 UNF-2B, 3-Way	(C-8-3)	**A3**
3/4-16 UNF-2B, 4-Way	(C-8-4)	**A4**
7/8-14 UNF-2B, 2-Way	(C-10-2)	**B2**
7/8-14 UNF-2B, 3-Way	(C-10-3)	**B3**
7/8-14 UNF-2B, 4-Way	(C-10-4)	**B4**
7/8-14 UNF-2B, 3-Way	(C-10-3S)	**BP3**
7/8-14 UNF-2B, 4-Way		**BPY3**
1-1/16 UN-2B, 2-Way	(C-12-2)	**C2**
1-1/16 UN-2B, 3-Way	(C-12-3)	**C3**
1-1/16 UN-2B, 3-Way	(C-12-3S)	**CP3**
1-1/16 UN-2B, 4-Way		**CPY3**
1-1/8-12 UNF-2B, 3-Way		**U3**
1-1/8-12 UNF-2B, 4-Way		**U4**
1-5/16-12 UNF-2B, 3-Way	(C-16-3S)	**S3**
1-5/16-12 UN-2B, 4-Way		**V4**
1-5/16-12 UN-2B, 4-Way	(C-16-4)	**D4**
M20x1.5, 3-Way		**Q3**
M22x1.5, 2-Way		**QG2**
M22x1.5, 3-Way		**QF3**
M27x1.5, 3-Way		**R3**
M27x2, 2-Way		**QK2**
M27x2, 2-Way		**K2**
M27x2, 3-Way		**K3**
M27x2, 3-Way		**QL3**
M30x1.5 S,SY 2-Way		**RB2**
M30x1.5 SX 3-Way		**RB3**
M38x2, 3-Way		**T3**
SLIP-IN, 3-Way		**W3, X3,Y3**
SLIP-IN, 4-Way		**Z4**

*For more details on cavities and suitable valve types please see the SMT catalogue 0019.

Body configuration

Single body	**01**
Dual body	**02**
Triple body	**03**

Connecting port

01	G1/4
02	SAE6, (9/6-18 UNF-2B)
03	G3/8
04	SAE8, (3/4-16 UNF-2B)
05	G1/2
06	SAE10, (7/8-14 UNF-2B)
07	G3/4
08	SAE12, (1-1/16-12 UN-2B)
09	G1
10	SAE16 (1-5/16-12 UN-2B)
11	G3/4 (A,P), G1/2 (T)

Number of „P"-ports*

No designation	single port „P1"
P	*dual port „P1" and „P2"

*only for cavity QG2, QK2, QL3, RB2,RB3

Control port

No designation	without control port
XY	drain for valve type VPN2-10, VPN1-20 version SX and SY

Gauge port

No designation	without gauge port
M	gauge port

Body material

AL	aluminium
ST	steel
G	cast iron

Material seals - only for Plugs

N	NBR
V	FPM (Viton)

Surface treatment

No designation	without treatment*
P	phosphated**
A	240 h salt spray test (ISO 9227)***
B	520 h salt spray test (ISO 9227)***
E1	elox transparent *

*only for aluminium bodies
**only for cast iron bodies
***only for steel bodies

Not all combination of features are available as actual products. The standard versions are listed on pages 2 and 3.
For the identification and feasibility of other body versions consult our technical department.

List of Bodies According to Cavity Types

Cavity	Connecting thread	Material	Ordering code	Pressure bar (PSI)	Weight kg (lbs)	Dimensions	Ordering No.
A2 (C-8-2) 3/4-16 UNF-2B 2-Way	G1/4	Aluminium	SB-A2-0101AL	250 (3626)	0.56 (1.23)	Page **5**	28129501
		Steel	SB-A2-0101ST-A	420 (6091)	1.27 (3.46)		27308300
	SAE6, 9/6-18	Aluminium	SB-A2-0102AL	250 (3626)	0.56 (1.23)		24365800
		Steel	SB-A2-0102ST-A	420 (6091)	1.27 (3.46)		24365700
	G3/8	Aluminium	SB-A2-0103AL	250 (3626)	0.56 (1.23)		40152100
		Steel	SB-A2-0103ST-A	420 (6091)	1.27 (3.46)		15662001
	SAE8, 3/4-16	Aluminium	SB-A2-0104AL	250 (3626)	0.56 (1.23)		33969000
	G1/2	Aluminium	SB-A2-0105AL	250 (3626)	0.56 (1.23)		19569000
		Steel	SB-A2-0105ST-A	420 (6091)	1.27 (3.46)		19569100
A3 (C-8-3) 3/4-16 UNF-2B 3-Way	G1/4	Aluminium	SB-A3-0101AL	250 (3626)	0,63 (1.39)	Page **5**	24365901
		Steel	SB-A3-0101ST-A	420 (6091)	1,36 (3.00)		28649300
	SAE6, 9/6-18	Aluminium	SB-A3-0102AL	250 (3626)	0,63 (1.39)		15662300
	G3/8	Aluminium	SB-A3-0103AL	250 (3626)	0,63 (1.39)		40186200
		Steel	SB-A3-0103ST-A	420 (6091)	1,36 (3.00)		44378600
	SAE8, 3/4-16	Aluminium	SB-A3-0104AL	250 (3626)	0,63 (1.39)		33979700
A4 (C-8-4) 3/4-16 UNF-2B 4-Way	G1/4	Aluminium	SB-A4-0101AL	250 (3626)	0.76 (1.68)	Page **5**	20786001
	SAE6, 9/6-18	Steel	SB-A4-0102ST-A	420 (6091)	2.14 (4.72)		34277800
	G3/8	Aluminium	SB-A4-0103AL	250 (3626)	0.76 (1.68)		15662700
		Steel	SB-A4-0103ST-A	420 (6091)	2.14 (4.72)		15662600
B2 (C-10-2) 7/8-14 UNF-2B 2-Way	G3/8	Aluminium	SB-B2-0103AL	250 (3626)	0.54 (1.19)	Page **6**	19430701
		Steel	SB-B2-0103ST-A	420 (6091)	1.50 (3.31)		19937600
	SAE8, 3/4-16	Aluminium	SB-B2-0104AL	250 (3626)	0.54 (1.19)		27744700
	G1/2	Aluminium	SB-B2-0105AL	250 (3626)	0.54 (1.19)		19569201
		Steel	SB-B2-0105ST-A	420 (6091)	1.50 (3.31)		19696400
	SAE10, 7/8-14	Steel	SB-B2-0106ST-A	420 (6091)	1.50 (3.31)		34293000
B3 (C-10-3) 7/8-14 UNF-2B 3-Way	G3/8	Aluminium	SB-B3-0103AL	250 (3626)	0.60 (1.32)	Page **6**	19965001
		Steel	SB-B3-0103ST-A	420 (6091)	1.68 (3.70)		19964800
	SAE8, 3/4-16	Steel	SB-B3-0104ST-A	420 (6091)	1.68 (3.70)		34048700
	G1/2	Aluminium	SB-B3-0105AL	250 (3626)	0.60 (1.32)		31033500
		Steel	SB-B3-0105ST-A	420 (6091)	1.68 (3.70)		27673100
	SAE10, 7/8-14	Steel	SB-B3-0106ST-A	420 (6091)	1.68 (3.70)		28199100
B4 (C-10-4) 7/8-14 UNF-2B 4-Way	G3/8	Aluminium	SB-B4-0103AL	250 (3626)	0.71 (1.57)	Page **6**	27461000
		Steel	SB-B4-0103ST-A	420 (6091)	1.99 (4.39)		27567600
	SAE8, 3/4-16	Steel	SB-B4-0104ST-A	420 (6091)	1.99 (4.39)		34277600
	G1/2	Aluminium	SB-B4-0105AL	250 (3626)	0.71 (1.57)		33054100
		Steel	SB-B4-0105ST-A	420 (6091)	1.99 (4.39)		27567500
	SAE10, 7/8-14	Aluminium	SB-B4-0106AL	250 (3626)	0.71 (1.57)		19965400
		Steel	SB-B4-0106ST-A	420 (6091)	1.99 (4.39)		19965200
BP3-01 (C-10-3S) 7/8-14 UNF-2B 3-Way	G3/8	Steel	SB-BP3-0103ST-B	420 (6091)	1,77 (3.90)	Page **7**	40950500
	SAE8, 3/4-16	Steel	SB-BP3-0104ST-B	420 (6091)	1,74 (3.84)		40954700
	G1/2	Steel	SB-BP3-0105ST-B	420 (6091)	1,75 (3,86)		40950900
	SAE10, 7/8-14	Steel	SB-BP3-0106ST-B	420 (6091)	1,71 (3.79)		40956800
BP3-02 (C-10-3S) 7/8-14 UNF-2B 3-Way	G3/8	Steel	SB-BP3-0203ST-B	420 (6091)	2.35 (5.18)	Page **7**	42628700
	SAE8, 3/4-16	Steel	SB-BP3-0204ST-B	420 (6091)	2.29 (5.05)		42800900
	G1/2	Steel	SB-BP3-0205ST-B	420 (6091)	2.28 (5.03)		42801000
	SAE10, 7/8-14	Steel	SB-BP3-0206ST-B	420 (6091)	2.21 (4.87)		42801100
BPY3-01 7/8-14 UNF-2B 4-Way	G3/8	Steel	SB-BYP3-0103ST-B	420 (6091)	1,96 (4.32)	Page **8**	40952800
	SAE8, 3/4-16	Steel	SB-BYP3-0104ST-B	420 (6091)	1,92 (4.23)		40957000
	G1/2	Steel	SB-BYP3-0105ST-B	420 (6091)	1,93 (4.25)		40953300
	SAE10, 7/8-14	Steel	SB-BYP3-0106ST-B	420 (6091)	1,88 (4.14)		40958100
BPY3-02 7/8-14 UNF-2B 4-Way	G3/8	Steel	SB-BPY3-0203ST-B	420 (6091)	2,74 (6.04)	Page **8**	43444400
	SAE8, 3/4-16	Steel	SB-BPY3-0204ST-B	420 (6091)	2,67 (5.89)		43444900
	G1/2	Steel	SB-BPY3-0205ST-B	420 (6091)	2,67 (5.89)		43444600
	SAE10, 7/8-14	Steel	SB-BPY3-0206ST-B	420 (6091)	2,59 (5.71)		43443900
C2 (C-12-2) 1-1/16-12 UN-2B 2-Way	SAE12, 1-1/16-12	Steel	SB-C2-0108ST-A	420 (6091)	2,30 (5.07)	Page 8	40222200

Cavity	Connecting thread	Material	Ordering code	Pressure bar (PSI)	Weight kg (lbs)	Dimensions	Ordering No.
C3 (C-12-3) 1-1/16-12 UN-2B 3-Way	G3/4	hliník	SB-C3-0107AL	250 (3626)	1.23 (2.71)	Page **8**	43334300
		ocel	SB-C3-0107ST-B	420 (6091)	3.39 (7.47)		43333900
	SAE12, 1-1/16-12	hliník	SB-C3-0108AL	250 (3626)	1.21 (2.67)		43385400
		ocel	SB-C3-0108ST-B	420 (6091)	3.32 (7.32)		43385000
	G1	hliník	SB-C3-0109AL	250 (3626)	1.16 (2.56)		43333800
		ocel	SB-C3-0109ST-B	420 (6091)	3.20 (7.05)		43331200
	SAE16, 1-5/16-12	hliník	SB-C3-0110AL	250 (3626)	1.14 (2.51)		43385300
		ocel	SB-C3-0110ST-B	420 (6091)	3.15 (6.94)		43383400
CP3-01 (C-12-3S) 1-1/16-12 UN-2B 3-Way	G1/2	Steel	SB-CP3-0105ST-B	420 (6091)	2,61 (5.75)	Page 9	41586400
	SAE10,7/8-14	Steel	SB-CP3-0106ST-B	420 (6091)	2,57 (5.67)		41578800
	G3/4	Steel	SB-CP3-0107ST-B	420 (6091)	2,54 (5.60)		41586700
	SAE12, 1-1/16-12	Steel	SB-CP3-0108ST-B	420 (6091)	2.49 (5.49)		41577600
CP3-02 (C-12-3S) 1-1/16-12 UN-2B 3-Way	G1/2	Steel	SB-CP3-0205ST-B	420 (6091)	3.70 (8.16)	Page 9	42806100
	SAE10,7/8-14	Steel	SB-CP3-0206ST-B	420 (6091)	3,63 (8.00)		42806200
	G3/4	Steel	SB-CP3-0207ST-B	420 (6091)	3.55 (7.83)		42806300
	SAE12, 1-1/16-12	Steel	SB-CP3-0208ST-B	420 (6091)	3.48 (7.67)		42806400
CPY3-01 1-1/16-12 UN-2B 4-Way	G1/2	Steel	SB-CYP3-0105ST-B	420 (6091)	2,99 (6.59)	Page **10**	41605700
	SAE10,7/8-14	Steel	SB-CYP3-0106ST-B	420 (6091)	2,94 (6.48)		41598400
	G3/4	Steel	SB-CYP3-0107ST-B	420 (6091)	2,91 (6.42)		41601300
	SAE12, 1-1/16-12	Steel	SB-CYP3-0108ST-B	420 (6091)	2,86 (6.30)		41592700
CPY3-02 1-1/16-12 UN-2B 4-Way	G1/2	Steel	SB-CPY3-0205ST-B	420 (6091)	4.22 (9.30)	Page **10**	43451200
	SAE10,7/8-14	Steel	SB-CPY3-0206ST-B	420 (6091)	4.15 (9.15)		43451600
	G3/4	Steel	SB-CPY3-0207ST-B	420 (6091)	4.07 (8.97)		43451300
	SAE12, 1-1/16-12	Steel	SB-CPY3-0208ST-B	420 (6091)	3.98 (8.77)		43448200
S3 (C-16-3S) 1-5/16-12 UNF-2B 3-Way	G3/4	Aluminium	SB-S3-0107AL	250 (3626)	0.95 (2.09)	Page **11**	24296100
		Steel	SB-S3-0107ST-A	420 (6091)	1.30 (2.87)		28018500
	G3/4	Aluminium	SB-S3-0207AL	250 (3626)	1.91 (4.21)		24296200
		Steel	SB-S3-0207ST-A	420 (6091)	3.00 (6.61)		28769200
D4 (C-16-4) 1-5/16-12 UN-2B 4-Way	G1/2	Aluminium	SB-D4-0105AL	250 (3626)	1.50 (3.31)	Page **11**	27955800
		Steel	SB-D4-0105ST-A	420 (6091)	4.35 (9.59)		31976800
U3 1-1/8-12 UNF-2B 3-Way	G1/2	Aluminium	SB-U3-0105AL	250 (3626)	0.81 (1.79)	Page 1**2**	24296700
		Steel	SB-U3-0105ST-A	420 (6091)	2.07 (4.56)		24296800
U4 1-1/8-12 UNF-2B 4-Way	G1/2	Aluminium	SB-U4-0105AL	250 (3626)	0.80 (1.76)	Page 1**2**	19296500
		Steel	SB-U4-0105ST-A	420 (6091)	2.05 (4.52)		18839000
V4 1-5/16-12 UN-2B 4-Way	G1	Steel	SB-V4-0109ST-A	420 (6091)	4.30 (9.47)	Page 1**2**	27418100
Q3 M20x1.5 3-Way	G3/8	Aluminium	SB-Q3-0103AL	250 (3626)	0.27 (0.60)	Page **13**	15628000
		Steel	SB-Q3-0103ST-A	420 (6091)	0.75 (1.65)		24295600
	G3/8	Aluminium	SB-Q3-0203AL	250 (3626)	0.46 (1.01)		17236700
		Steel	SB-Q3-0203ST-A	420 (6091)	1.28 (2.82)		24295700
		Aluminium	SB-Q3-0303AL	250 (3626)	0.47 (1.04)		15628100
QF3 M22x1.5, 3-Way	G3/8	Cast iron	SB-QF3-0103MGN-P	350 (5080)	1.10 (2.43)	Page **14**	16002700
R3 M27x1.5 3-Way	G1/2	Aluminium	SB-R3-0105AL	250 (3626)	0.44 (0.97)	Page **14**	16947300
		Steel	SB-R3-0105ST-A	420 (6091)	1.20 (2.65)		24295800
		Aluminium	SB-R3-0205AL	250 (3626)	0.78 (1.72)		24295900
		Steel	SB-R3-0205ST-A	420 (6091)	2.15 (4.74)		24296000

Cavity	Connecting thread	Material	Ordering code	Pressure bar (PSI)	Weight kg (lbs)	Dimensions	Ordering No.
QG2 M22x1.5 2-Way	G3/8	Cast iron	SB-QG2-0103MGN-P	350 (5080)	1.17 (2.58)	Page **15**	15989600
			SB-QG2-0103PMGN-P	350 (5080)	1.17 (2.58)		15989400
			SB-QG2-0103PMGV-P	350 (5080)	1.17 (2.58)		22950200
			SB-QG2-0103MGV-P	350 (5080)	1.17 (2.58)		22950400
			SB-QG2-0103G-P	350 (5080)	1.05 (2.31)		15653400
	SAE8, 3/4-16	Cast iron	SB-QG2-0104MGN-P	350 (5080)	1.17 (2.58)		15990000
			SB-QG2-0104MGV-P	350 (5080)	1.17 (2.58)		22939400
			SB-QG2-0104PMGN-A	350 (5080)	1.17 (2.58)		18748500
			SB-QG2-0104PMGN-P	350 (5080)	1.17 (2.58)		15989800
			SB-QG2-0104PMGV-P	350 (5080)	1.17 (2.58)		22939200
			SB-QG2-0104G-P	350 (5080)	1.00 (2.20)		15653600
	G1/2	Cast iron	SB-QG2-0105MGN-P	350 (5080)	1.17 (2.58)		15989700
			SB-QG2-0105PMGN-P	350 (5080)	1.17 (2.58)		15989500
			SB-QG2-0105PMGV-P	350 (5080)	1.17 (2.58)		22950300
			SB-QG2-0105MGV-P	350 (5080)	1.17 (2.58)		22950500
			SB-QG2-0105G-P	350 (5080)	1.00 (2.20)		15653500
	SAE10, 7/8-14	Cast iron	SB-QG2-0106MGN-P	350 (5080)	1.17 (2.58)		15990100
			SB-QG2-0106MGV-P	350 (5080)	1.17 (2.58)		22939500
			SB-QG2-0106PMGV-P	350 (5080)	1.17 (2.58)		22939300
			SB-QG2-0106PMGN-P	350 (5080)	1.17 (2.58)		15989900
			SB-QG2-0106G-P	350 (5080)	0.95 (2.09)		15653700
W3, X3 D20, 3-Way	G3/8	Aluminium	SB-W3-0103AL	250 (3626)	0.56 (1.23)	Page **15**	18737300
	SAE8, 3/4-16		SB-W3-0104AL	250 (3626)	0.56 (1.23)		30945900
Y3 D17, 3-Way	G3/8	Aluminium	SB-Y3-0103AL	250 (3626)	0.55 (1.21)	Page **15**	18737200
QK2, M27x2 2-Way	G3/4	Cast iron	SB-QK2-0107MGN-P	350 (5080)	2.70 (5.95)	Page **16**	15996300
			SB-QK2-0107MGN-A	350 (5080)	2.70 (5.95)		24510200
			SB-QK2-0107MGV-P	350 (5081)	2.70 (5.95)		22976300
			SB-QK2-0107PMGN-P	350 (5080)	2.70 (5.95)		15996500
			SB-QK2-0107PMGV-A	350 (5080)	2.70 (5.95)		19002800
			SB-QK2-0107PMGV-P	350 (5080)	2.70 (5.95)		22976600
	SAE12, 1-1/16	Cast iron	SB-QK2-0108PMGN-P	350 (5080)	2.70 (5.95)		15996600
			SB-QK2-0108PMGV-P	350 (5080)	2.70 (5.95)		22980100
QL3 M27x2, 2-Way	G3/4	Cast iron	SB-QL3-0107XYMGN-P	350 (5080)	2.70 (5.95)	Page **16**	15996400
			SB-QL3-0107XYMGV-P	350 (5080)	2.70 (5.95)		22976400
K2 M27x2 2-Way	G1/2	Aluminium	SB-K2-0105AL	250 (3626)	0.40 (0.88)	Page **16**	16991600
		Steel	SB-K2-0105ST-A	420 (6091)	1.50 (3.31)		18953400
K3 M27x2 2-Way	G1/2	Aluminium	SB-K3-0105AL	250 (3626)	0.65 (1.43)	Page **16**	27135800
		Steel	SB-K3-0105ST-A	420 (6091)	1.59 (3.51)		24296400
	SAE10, 7/8-14	Aluminium	SB-K3-0106AL	250 (3626)	0.57 (1.26)		24296300
	G3/4, G1/2	Aluminium	SB-K3-0111AL	250 (3626)	0,87 (1.92)		42505300
		Steel	SB-K3-0111ST-B	420 (6091)	2,39 (5.27)		42499100
T3 M38x2 3-Way	G1	Aluminium	SB-T3-0109AL	250 (3626)	1.47 (3.24)	On request	27871900
		Steel	SB-T3-0109ST-A	420 (6091)	4.00 (8.82)		27135700
			SB-T3-0209ST-A	420 (6091)	6.20 (13.7)		30547100
RB2 M30x1.5 2-Way Valve S, SY	G1	Steel	SB-RB2-0109XYMST-B	420 (6091)	3.98 (8.77)	Page **17**	40793100
			SB-RB2-0109PXYMST-B		4.20 (9.26)		40792500
RB3 M30x1.5 2-Way Valve SX	G1	Steel	SB-RB3-0109XYMST-B	420 (6091)	4.20 (9.26)	Page **17**	40783900
			SB-RB3-0109PXYMST-B		4.18 (9.22)		40777500
Z4 7/8-14 UNF-2B 4-Way	G3/8	Aluminium	SB-Z4-0103AL	250 (3626)	2.14 (4.72)	Page **18**	34095800

Body for 2-Way SIC Valve

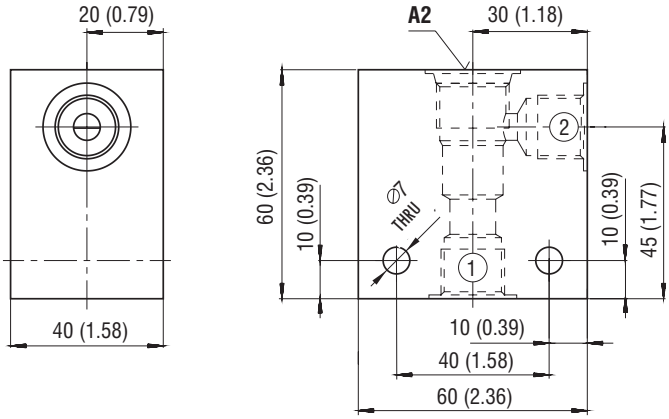

Model A2	Connecting port
	1, 2
SB-A2-0101*	G1/4
SB-A2-0102*	SAE6, 9/16-18
SB-A2-0103*	G3/8
SB-A2-0104*	SAE8, 3/4-16

Body for 3-Way SIC Valve

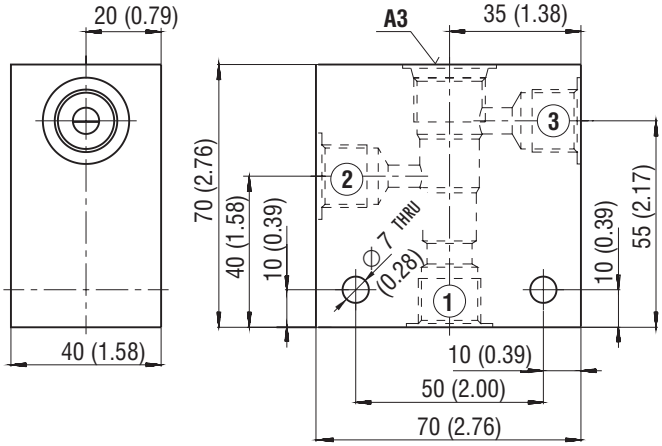

Model A3	Connecting port
	1, 2, 3
SB-A3-0101*	G1/4
SB-A3-0102*	SAE6, 9/16-18
SB-A3-0103*	G3/8
SB-A3-0104*	SAE8, 3/4-16

Body for 4-Way SIC Valve

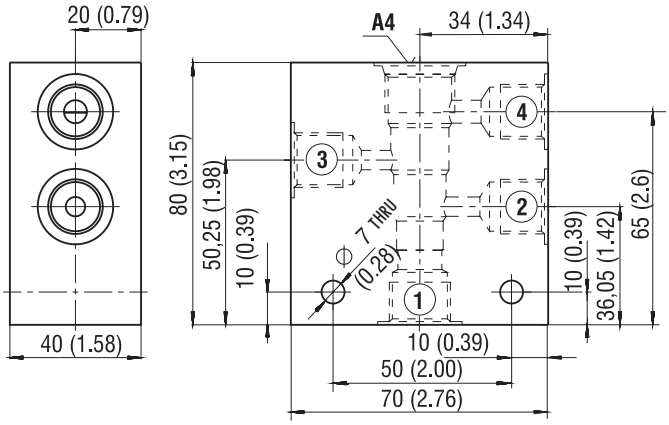

Model A4	Connecting port
	1, 2, 3, 4
SB-A4-0101*	G1/4
SB-A4-0102*	SAE6, 9/16-18
SB-A4-0103*	G3/8
SB-A4-0104*	SAE8, 3/4-16

Body for 2-Way SIC Valve

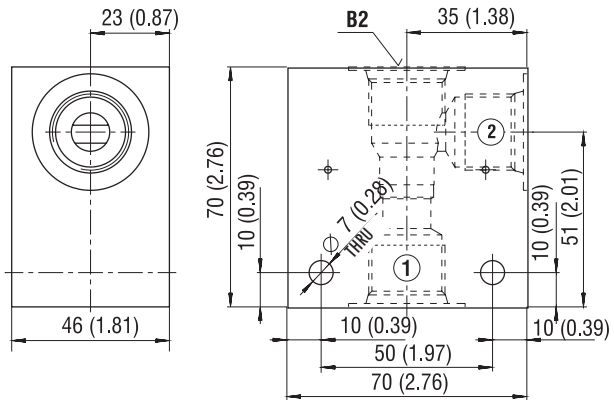

Model B2	Connecting port
	1, 2
SB-B2-0103*	G3/8
SB-B2-0104*	SAE8, 3/4-16
SB-B2-0105*	G1/2
SB-B2-0106*	SAE10, 7/8-14

Body for 3-Way SIC Valve

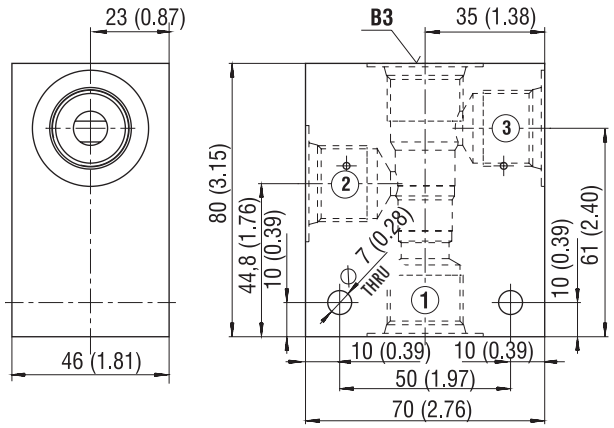

Model B3	Connecting port
	1, 2, 3
SB-B3-0103*	G3/8
SB-B3-0104*	SAE8, 3/4-16
SB-B3-0105*	G1/2
SB-B3-0106*	SAE10, 7/8-14

Body for 4-Way SIC Valve

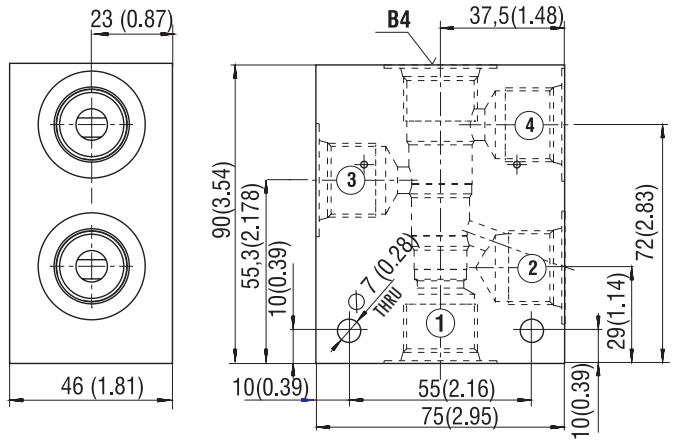

Model B4	Connecting port
	1, 2, 3, 4
SB-B4-0103*	G3/8
SB-B4-0104*	SAE8, 3/4-16
SB-B4-0105*	G1/2
SB-B4-0106*	SAE10, 7/8-14

BP3 - 7/8-14 UNF-2B

Dimensions in millimeters (inches)

Body for 3-Way SIC Valve

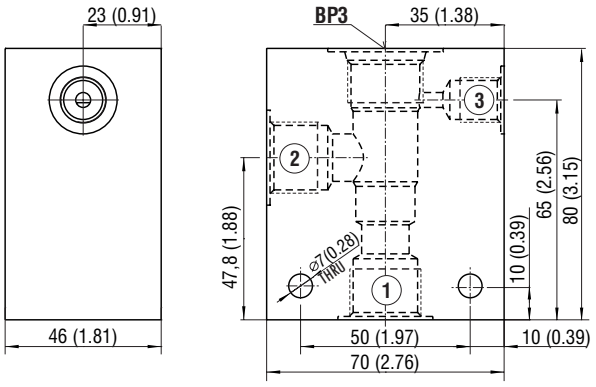

Model BP3	Connecting port	
	1, 2	3
SB-BP3-0103*	G3/8	G1/4
SB-BP3-0104*	SAE8, 3/4-16	SAE6, 9/16-18
SB-BP3-0105*	G1/2	G1/4
SB-BP3-0106*	SAE10, 7/8-14	SAE6, 9/16-18

Body for 3-Way SIC Valve - Body configuration 02

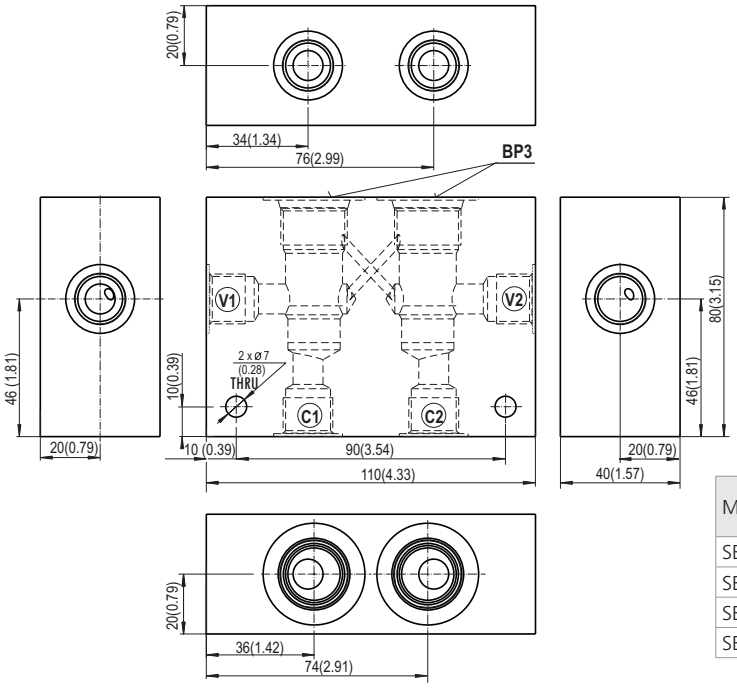

Model BP3	Connecting port
	V1, V2, C1, C2
SB-BP3-0203*	G3/8
SB-BP3-0204*	SAE8, 3/4-16
SB-BP3-0205*	G1/2
SB-BP3-0206*	SAE10, 7/8-14

BPY3 - 7/8-14 UNF-2B

Rozměry v milimetrech (in)

Body for 4-Way SIC Valve

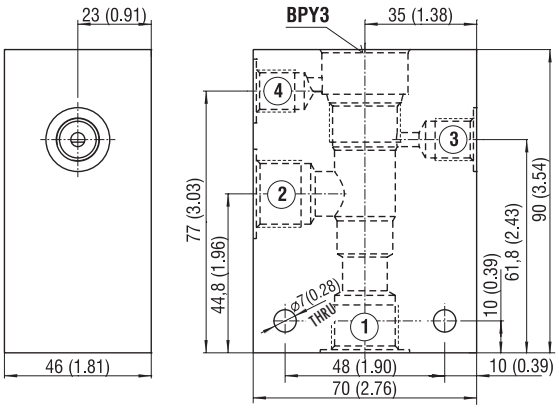

Model BPY3	Connecting port	
	1, 2	3, 4
SB-BPY3-0103*	G3/8	G1/4
SB-BPY3-0104*	SAE8, 3/4-16	SAE6, 9/16-18
SB-BPY3-0105*	G1/2	G1/4
SB-BPY3-0106*	SAE10, 7/8-14	SAE6, 9/16-18

Body for 4-Way SIC Valve - Body configuration 02

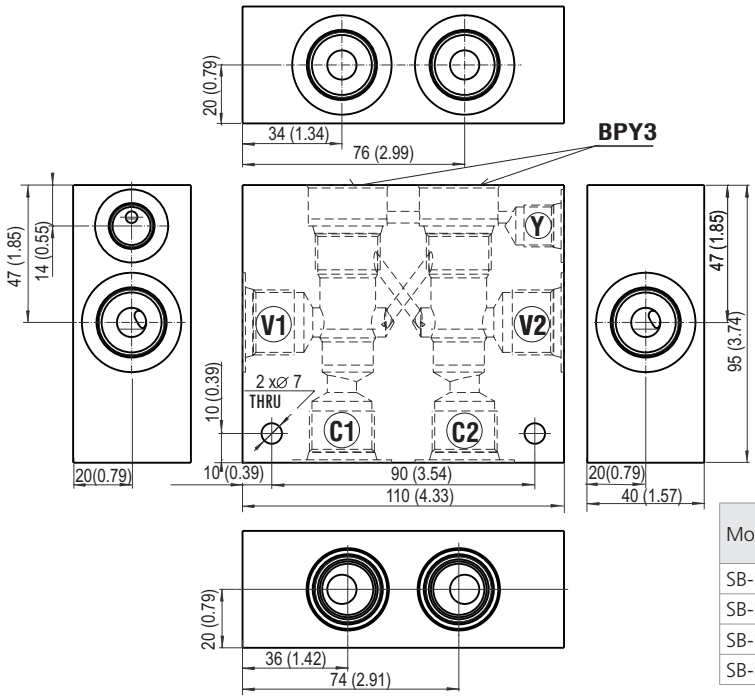

Model BPY3	Connecting port	
	V1, V2, C1, C2	Y
SB-BPY3-0203*	G3/8	G1/4
SB-BPY3-0204*	SAE8, 3/4-16	SAE6, 9/16-18
SB-BPY3-0205*	G1/2	G1/4
SB-BPY3-0206*	SAE10, 7/8-14	SAE6, 9/16-18

C2 - 1-1/16-12 UN-2B

Body for 2-Way SIC Valve

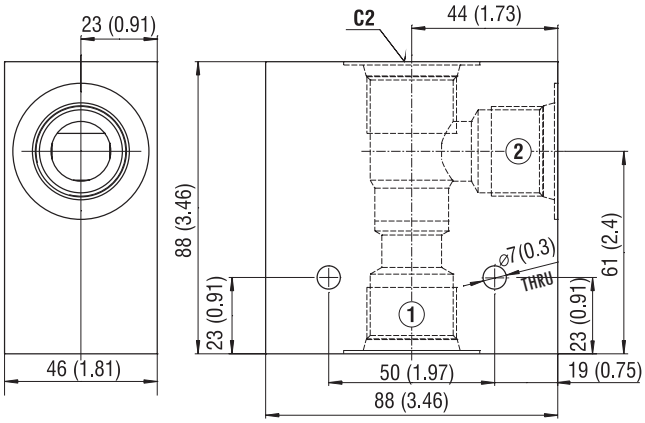

Model C2	Connecting port
	1, 2
SB-C2-0108*	SAE12, 1-1/16-12

C3 - 1-1/16-12 UN-2B

Dimensions in millimeters (inches)

Body for 3-Way SIC Valve

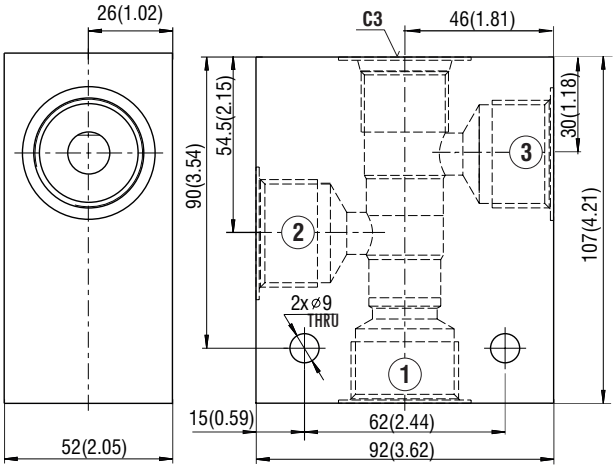

Model C3	Connecting port
	1, 2, 3
SB-C3-0107*	G3/4
SB-C2-0108*	SAE12, 1-1/16-12
SB-C3-0109*	G1
SB-C3-0110*	SAE16, 1-5/16-12

Body for 3-Way SIC Valve

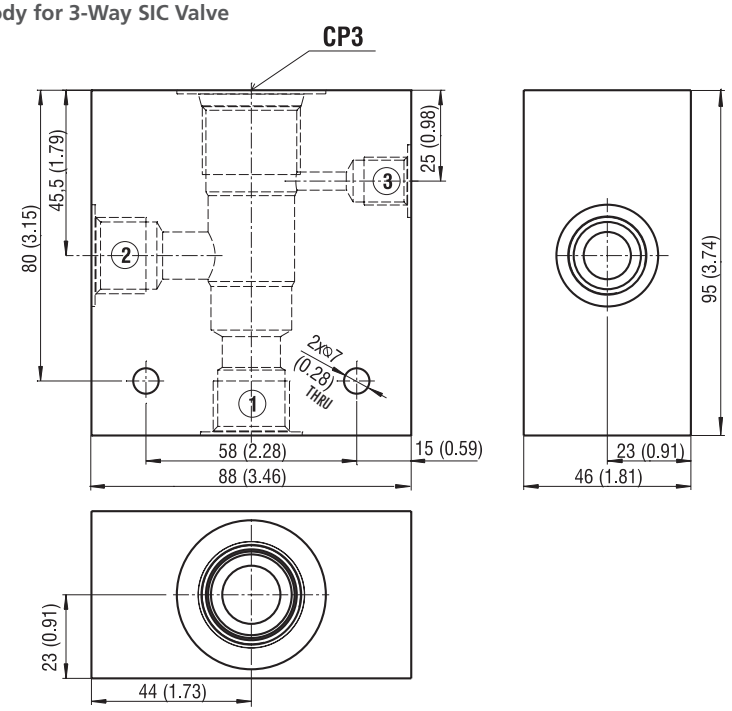

Model CP3	Connecting port	
	1, 2	3
SB-CP3-0105*	G1/2	G1/4
SB-CP3-0106*	SAE10, 7/8-14	SAE6, 9/16-18
SB-CP3-0107*	G3/4	G1/4
SB-CP3-0108*	SAE12, 1-1/16-12	SAE6, 9/16-18

Body for 3-Way SIC Valve - Body configuration 02

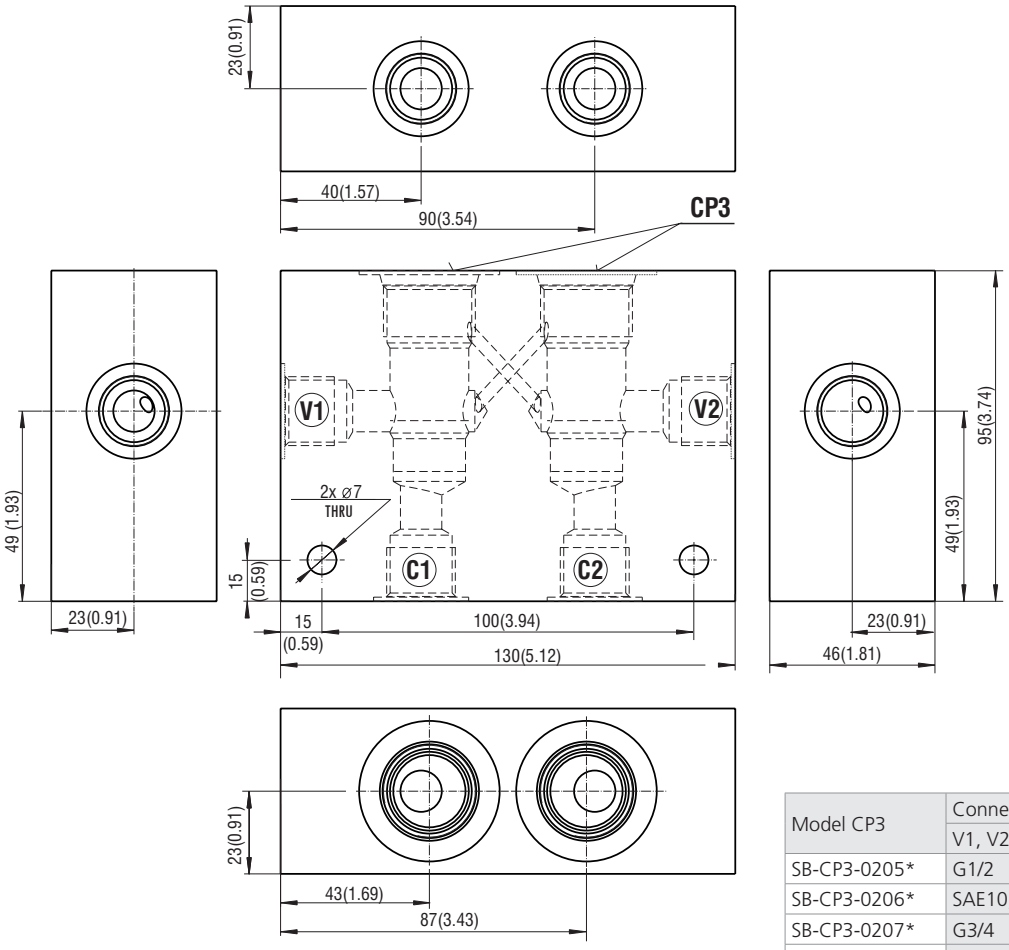

Model CP3	Connecting port
	V1, V2, C1, C2
SB-CP3-0205*	G1/2
SB-CP3-0206*	SAE10, 7/8-14
SB-CP3-0207*	G3/4
SB-CP3-0208*	SAE12, 1-1/16

Body for 4-Way SIC Valve

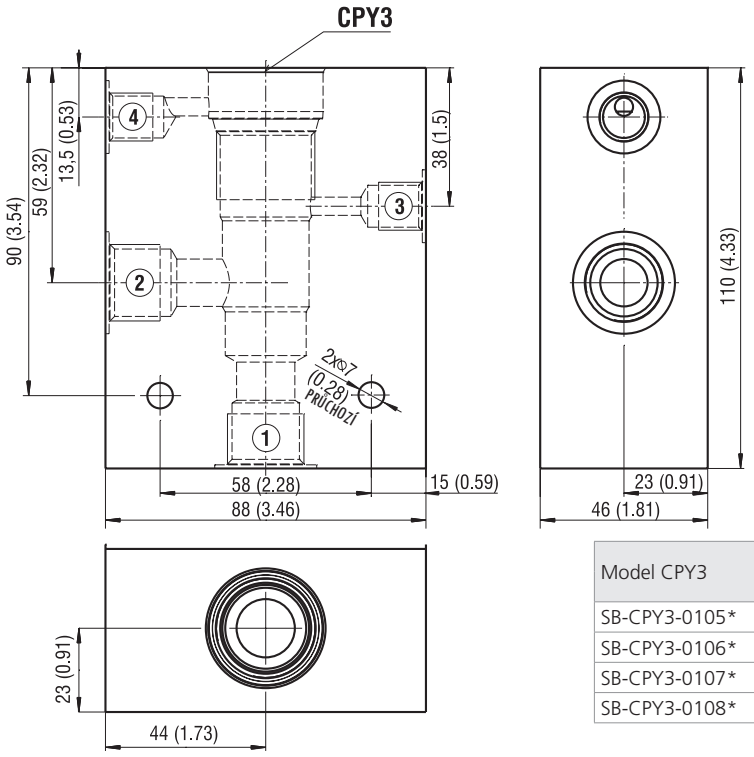

Model CPY3	Connecting port	
	1, 2	3, 4
SB-CPY3-0105*	G1/2	G1/4
SB-CPY3-0106*	SAE10, 7/8-14	SAE6, 9/16-18
SB-CPY3-0107*	G3/4	G1/4
SB-CPY3-0108*	SAE12, 1-1/16-12	SAE6, 9/16-18

Body for 4-Way SIC Valve - Body configuration 02

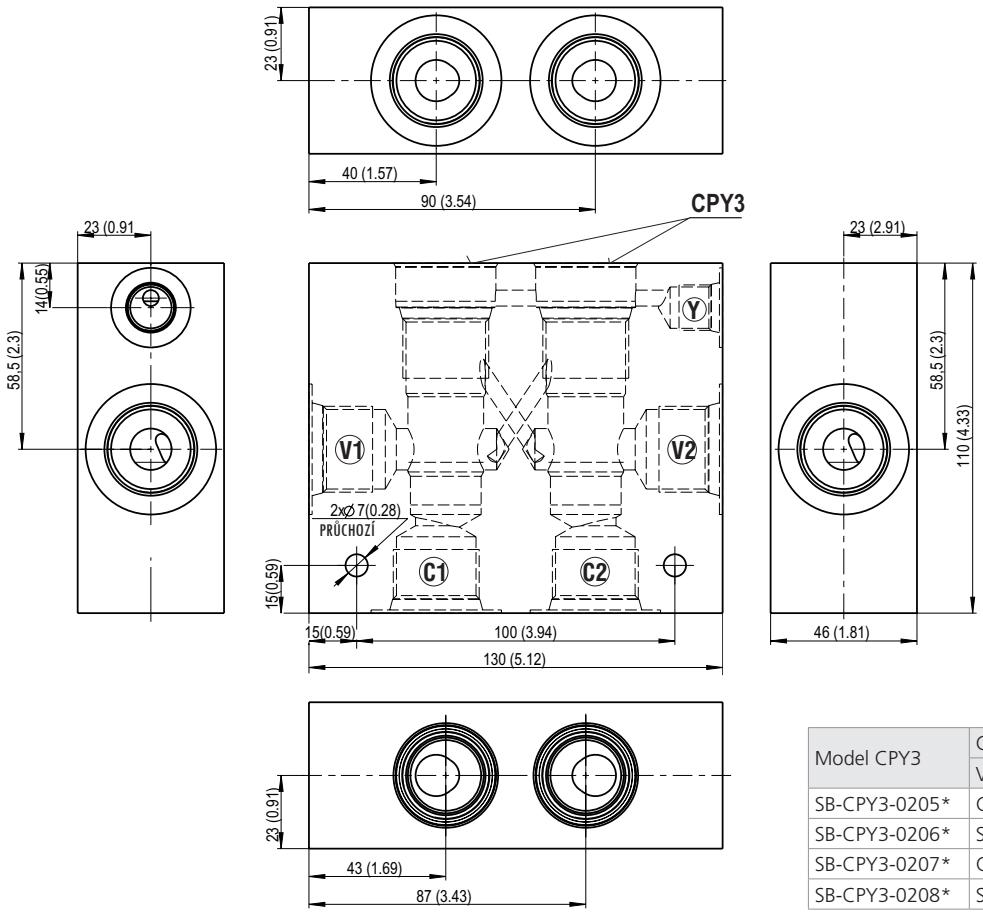

Model CPY3	Connecting port	
	V1, V2, C1, C2	Y
SB-CPY3-0205*	G1/2	G1/4
SB-CPY3-0206*	SAE10, 7/8-14	SAE6, 9/16-18
SB-CPY3-0207*	G3/4	G1/4
SB-CPY3-0208*	SAE12, 1-1/16-12	SAE6, 9/16-18

S3 - 1-5/16-12 UNF-2B

Dimensions in millimeters (inches)

Body for 3-Way SIC Valve - Body configuration 01

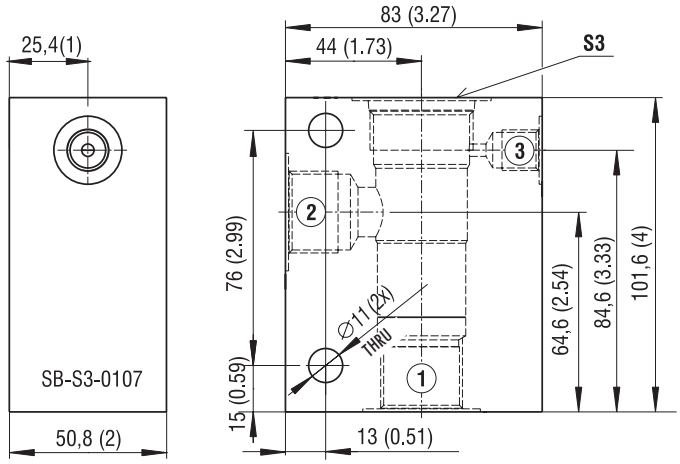

Model S3	Connecting port	
	1, 2	3
SB-S3-0107*	G3/4	G1/4
SB-S3-0108*	SAE12, 1-1/16-12	SAE6, 9/16-18

Body for 3-Way SIC Valve - Body configuration 02

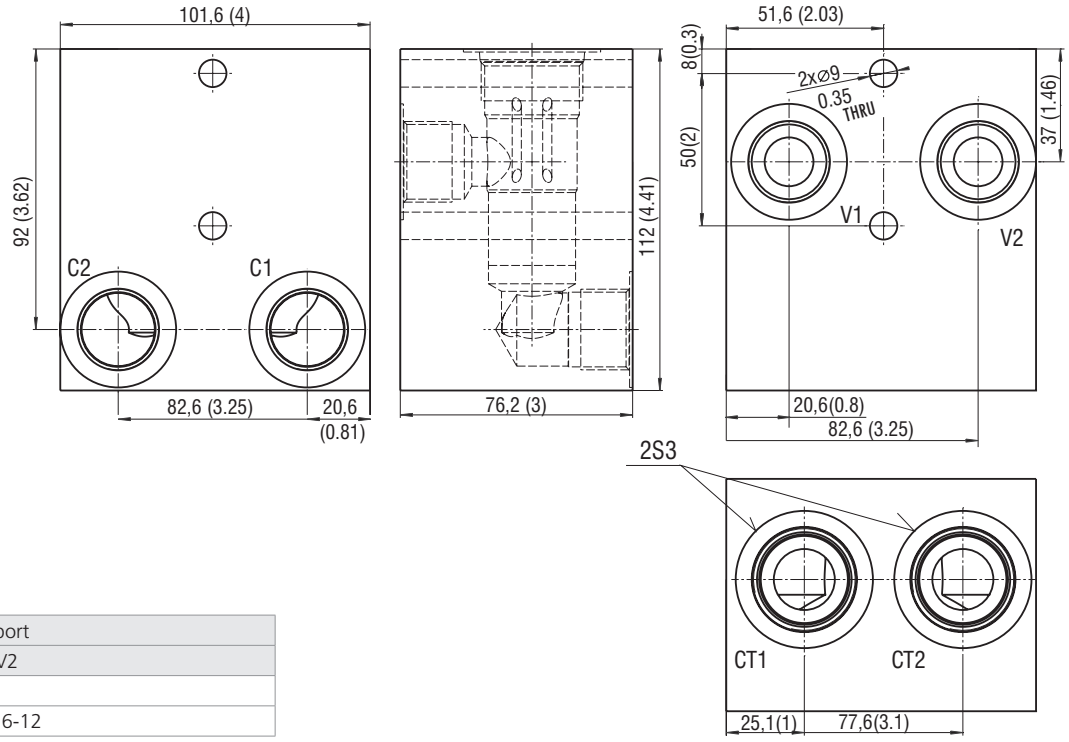

Model S3	Connecting port
	C1, C2, V1, V2
SB-S3-0207*	G3/4
SB-S3-0208*	SAE12, 1-1/16-12

D4 - 1-5/16-12 UN-2B

Dimensions in millimeters (inches)

Body for 4-Way SIC Valve

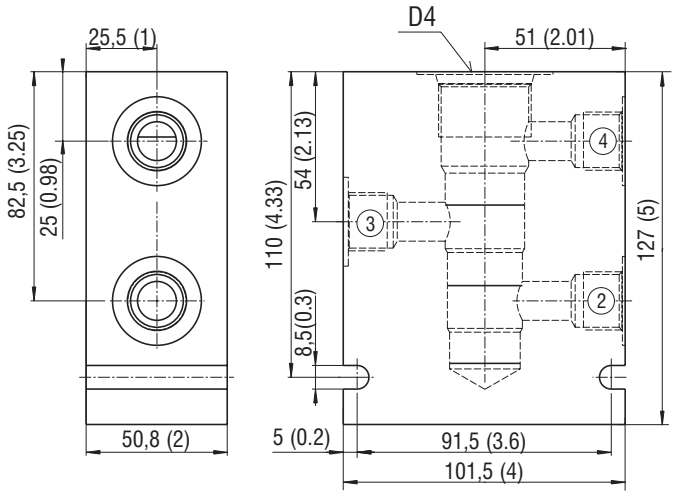

Model D4	Connecting port
	2, 3, 4
SB-D4-0105*	G1/2
SB-D4-0106*	SAE10, 7/8-14

U3, U4 - 1-1/8-12 UNF-2B

Dimensions in millimeters (inches)

Body for 3-Way SIC Valve

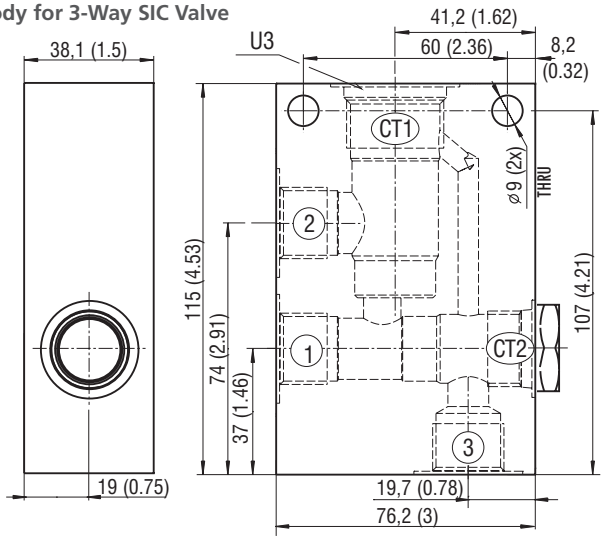

Body for 4-Way SIC Valve

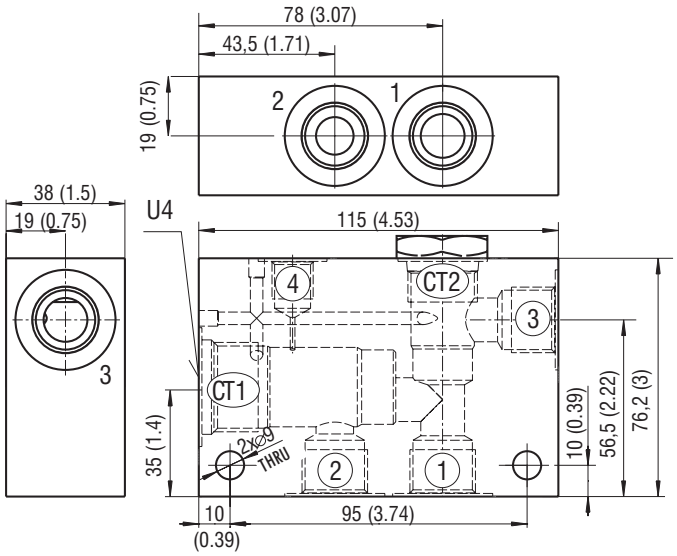

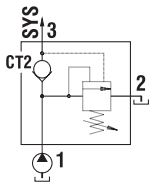

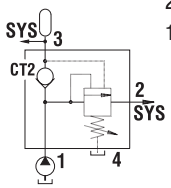

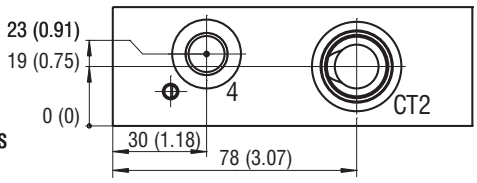

Model U3, U4	Connecting port	
	1, 2, 3	4
SB-U3-0105*	G1/2	-
SB-U3-0106*	SAE10, 7/8-14	-
SB-U4-0105*	G1/2	G1/4
SB-U4-0106*	SAE10, 7/8-14	SAE6, 9/16-18

V4 - 1-5/16-12 UN-2B

Dimensions in millimeters (inches)

Body for 3-Way SIC Valve

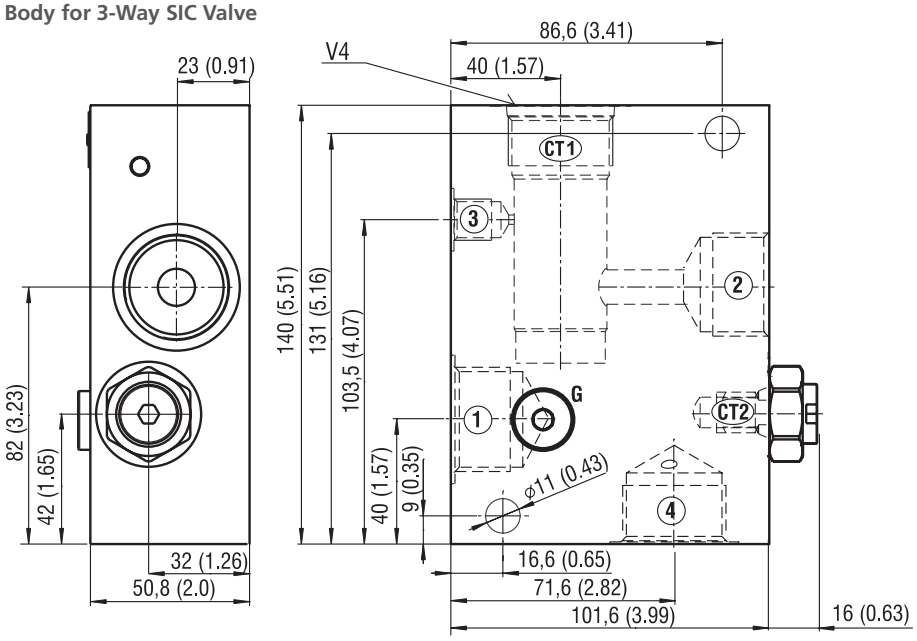

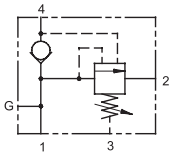

Model V4	Connecting port	
	1, 2, 4	3, G
SB-V4-0109*	G1	G1/4

Body for 3-Way SIC Valve - Body configuration 01

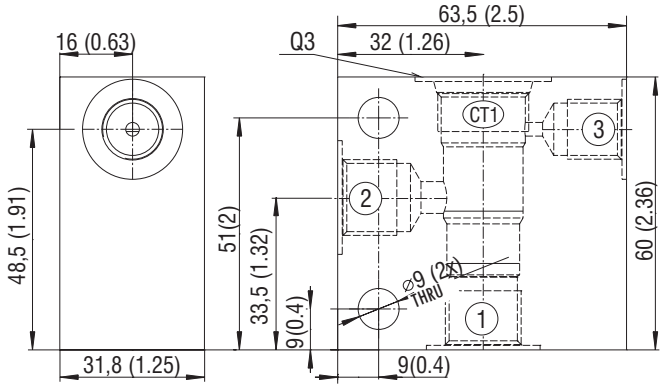

Model Q3	Connecting port	
	1, 2	3
SB-Q3-0103*	G3/8	G1/4
SB-Q3-0104*	SAE8, 3/4-16	SAE6, 9/16-18

Body for 3-Way SIC Valve - Body configuration 02

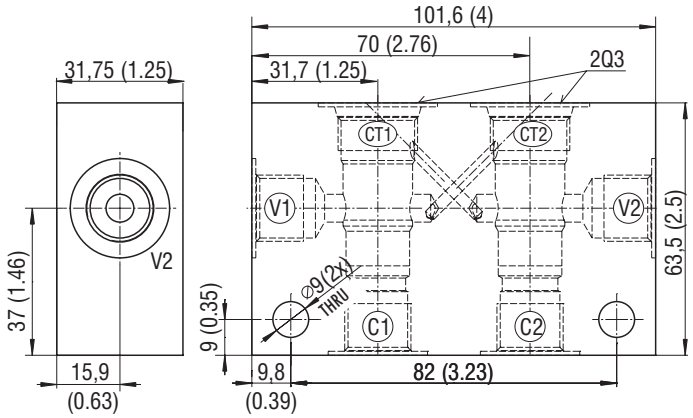

Model Q3	Connecting port
	C1, C2, V1, V2
SB-Q3-0203*	G3/8
SB-Q3-0204*	SAE8, 3/4-16

Body for 3-Way SIC Valve - Body configuration 03

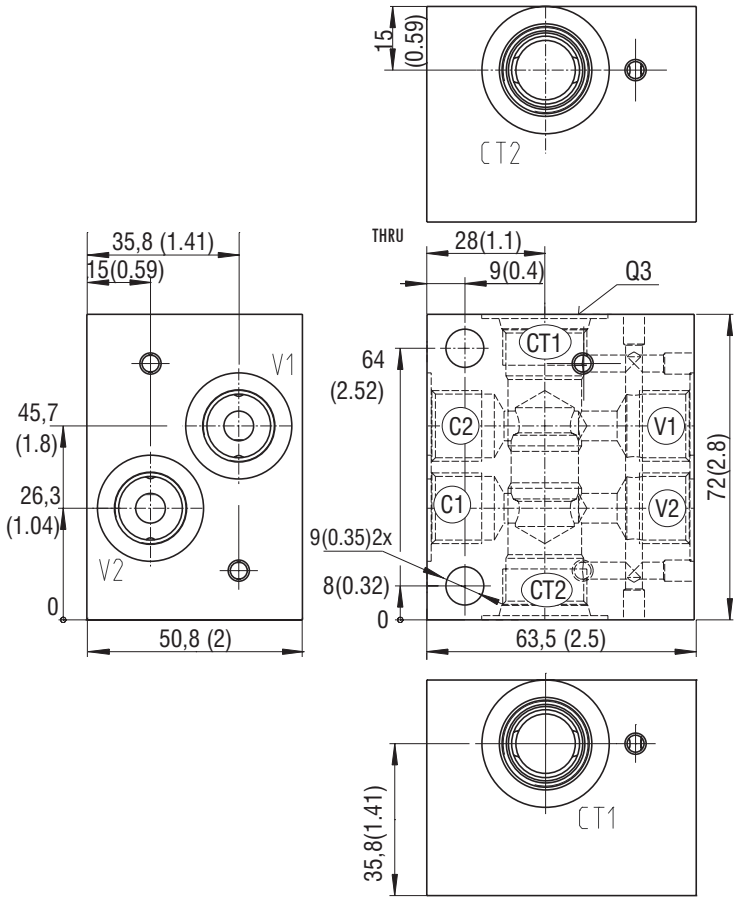

Model Q3	Connecting port
	C1, C2, V1, V2
SB-Q3-0303*	G3/8

QF3 - M22x1.5

Dimensions in millimeters (inches)

Body for 3-Way SIC Valve

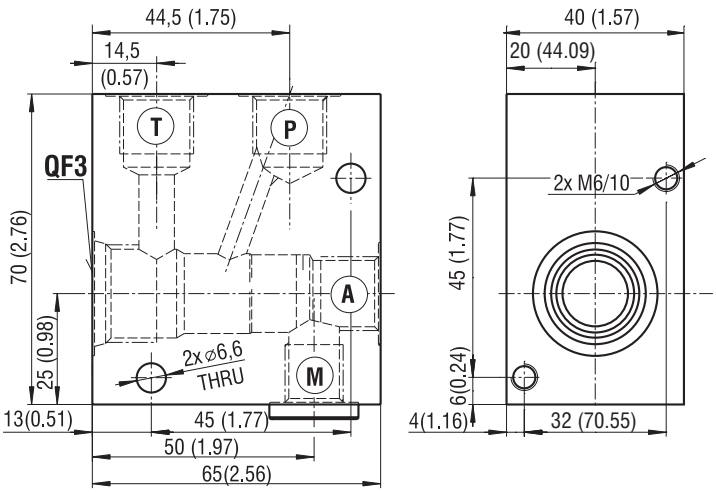

The steel end plugs are screwed into port M. The sealing material on these end plugs is either NBR or Viton, see the ordering code.

Model QF3	Former name
SB-QF3-0103G*	RRA1-06

Model QF3	Connecting port	
	P, T, A	M
SB-QF3-0103G*	G3/8	G1/4

R3 - M27x1.5

Dimensions in millimeters (inches)

Body for 3-Way SIC Valve - Body configuration 01

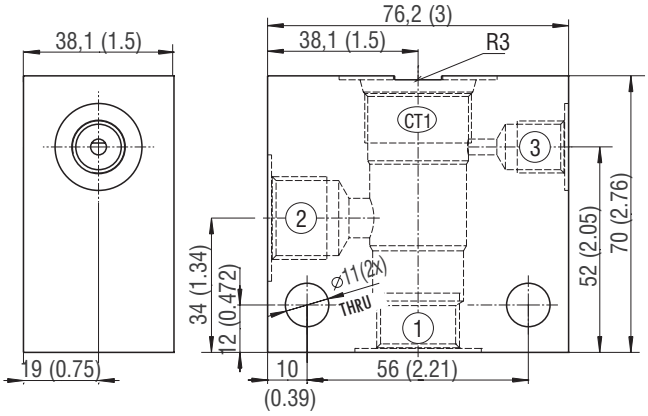

Model R3	Connecting port	
	1, 2	3
SB-R3-0105*	G1/2	G1/4
SB-R3-0106*	SAE10, 7/8-14	SAE6, 9/16-18

Body for 3-Way SIC Valve - Body configuration 02

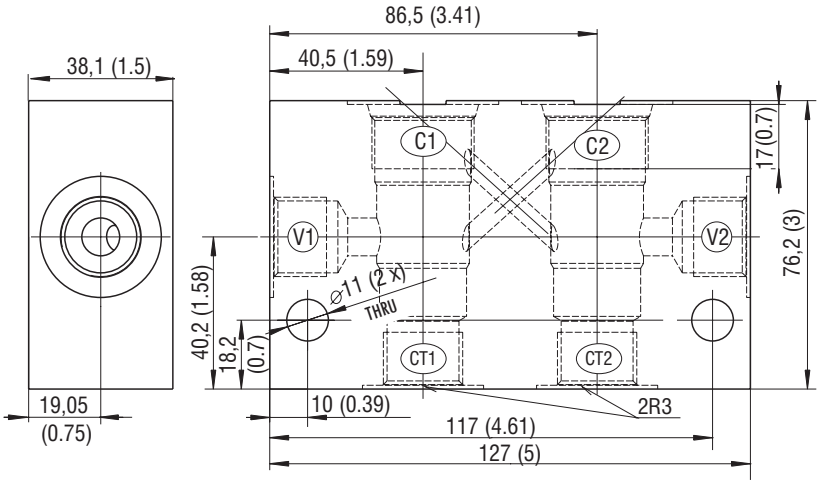

Model R3	Connecting port
	C1, C2, V1, V2
SB-R3-0205*	G1/2
SB-R3-0206*	SAE10, 7/8-14

QG2 - M22x1.5

Dimensions in millimeters (inches)

Body for 2-Way SIC Valve

Body with gauge port M

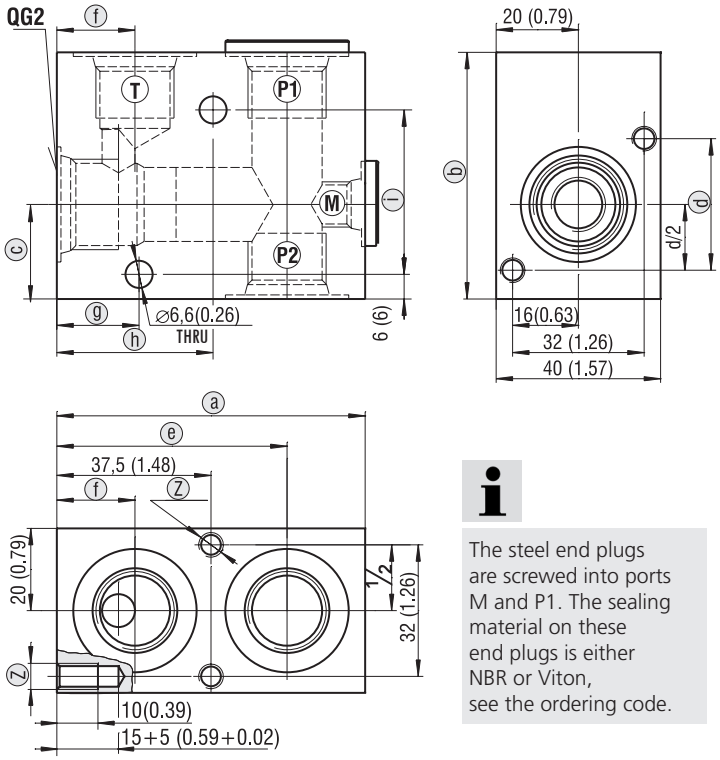

The steel end plugs are screwed into ports M and P1. The sealing material on these end plugs is either NBR or Viton, see the ordering code.

Body without gauge port M

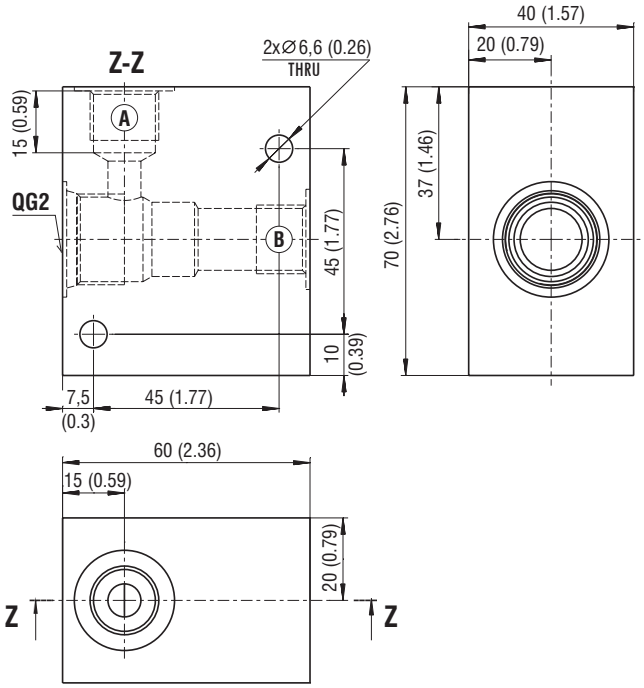

Body with gauge port M					
Model QG2	Former name	Connecting thread	Model QG2	Former name	Connecting thread
SB-QG2-0103PMG*	RA1-06	G3/8	SB-QG2-0105PMG*	RA2-06	G1/2
SB-QG2-0103MG*	RB1-06		SB-QG2-0105MG*	RB2-06	
SB-QG2-0104PMG*	RA3-06	SAE8, 3/4-16	SB-QG2-0106PMG*	RA4-06	SAE10, 7/8-14
SB-QG2-0104MG*	RB3-06		SB-QG2-0106MG*	RB4-06	

Body without gauge port M		
Model QG2	Former name	Connecting thread
SB-QG2-0103G*	R1-ROE3	G3/8
SB-QG2-0104G*	R3-ROE3	SAE8, 3/4-16
SB-QG2-0105G*	R2-ROE3	G1/2
SB-QG2-0106G*	R4-ROE3	SAE10, 7/8-14

Body with gauge port M														
Model QG2	Connecting port					Dimensions in mm (in)								
	P1	P2	T	M	Z	a	b	c	d	e	f	g	h	i
SB-QG2-0103PMG*	G3/8	G3/8	G3/8	G1/4	M6-6H	60 (2.36)	70 (2.76)	33 (1.30)	45 (1.77)	39 (1.54)	12.5 (0.49)	7.5 (0.30)	52.5 (2.07)	45 (1.77)
SB-QG2-0103MG*	G3/8	-	G3/8	G1/4	M6-6H	60 (2.36)	70 (2.76)	33 (1.30)	60 (2.36)	38 (1.50)	15 (0.59)	7.5 (0.30)	38 (1.50)	45 (1.77)
SB-QG2-0104PMG*	SAE8	SAE8	SAE8	SAE4	1/4-20UNC-2B	75 (2.95)	60 (2.36)	33 (1.30)	32 (1.26)	56 (2.20)	19 (0.75)	20 (0.78)	38 (1.50)	40 (1.57)
SB-QG2-0104MG*	SAE8	-	SAE8	SAE4	1/4-20UNC-2B	60 (2.36)	60 (2.36)	23 (0.91)	32 (1.26)	40 (1.57)	19 (0.75)	20 (0.78)	38 (1.50)	40 (1.57)
SB-QG2-0105PMG*	G1/2	G1/2	G1/2	G1/4	M6-6H	70 (2.76)	70 (2.76)	33 (1.30)	45 (1.77)	46 (1.81)	14 (0.55)	18 (0.70)	63 (2.48)	45 (1.77)
SB-QG2-0105MG*	G1/2	-	G1/2	G1/4	M6-6H	60 (2.36)	70 (2.76)	33 (1.30)	45 (1.77)	38 (1.50)	16 (0.63)	7.5 (0.30)	38 (1.50)	45 (1.77)
SB-QG2-0106PMG*	SAE10	SAE10	SAE10	SAE4	1/4-20UNC-2B	75 (2.95)	60 (2.36)	23 (0.91)	32 (1.26)	56 (2.20)	19 (0.75)	20 (0.79)	38 (1.50)	40 (1.57)
SB-QG2-0106MG*	SAE10	-	SAE10	SAE4	1/4-20UNC-2B	60 (2.36)	60 (2.36)	23 (0.91)	32 (1.26)	40 (1.57)	19 (0.75)	20 (0.79)	38 (1.50)	40 (1.57)

Y3, W3 (X3) - M27x2

Dimensions in millimeters (inches)

Body for 3-Way SIC Valve

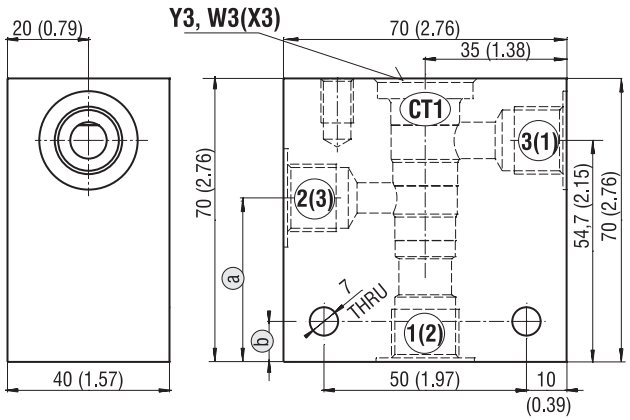

Model	Connecting port	Dimensions in mm (in)	
	1, 2, 3	a	b
SB-Y3-0103*	G3/8	29.5 (1.16)	10 (0.39)
SB-W3-0103*	G3/8	37.7 (1.48)	10 (0.39)
SB-W3-0104*	SAE8, 3/4-16	37.7 (1.48)	20 (0.79)
SB-X3-0103*	G3/8	37.7 (1.48)	10 (0.39)
SB-X3-0104*	SAE8, 3/4-16	37.7 (1.48)	20 (0.79)

QK2, QL3 - M27x2

Dimensions in millimeters (inches)

Body for 2(3)-Way SIC Valve

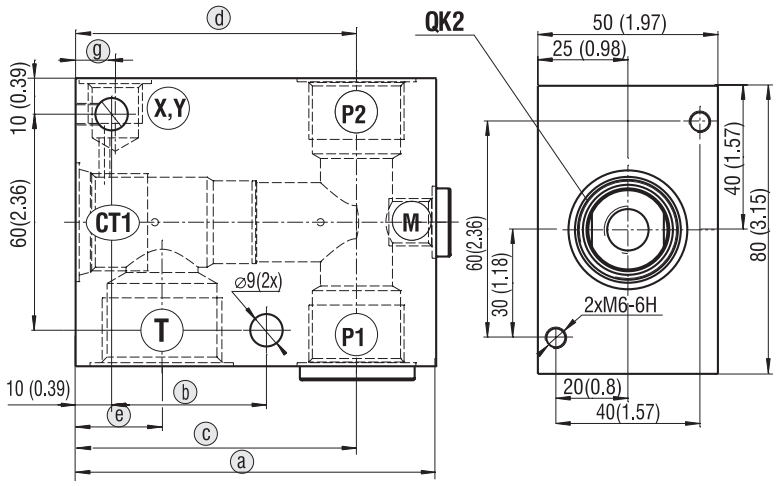

The steel end plugs are screwed into ports M and P1. The sealing material on these end plugs is either NBR or Viton, see the ordering code.

Model	Former nam	Connecting thread
SB-QK2-0107PMG*	RA2-10	G3/4
SB-QK2-0107MG*	RB2-10	
SB-QK2-0108PMG*	RA3-10	SAE12, 1-1/16
SB-QL3-0107XYMG*	RC2-10	G3/4

Model	Connecting port					Dimensions in mm (in)					
	P1	P2	T	M	X, Y	a	b	c	d	e	g
SB-QK2-0107PMG*	G3/4	G3/4	G1	G1/4	-	100 (3.94)	43 (1.69)	78 (3.07)	78 (3.07)	24 (0.94)	-
SB-QK2-0108PMG*	SAE12	SAE12	SAE16	SAE4	-	100 (3.94)	43 (1.69)	78 (3.07)	78 (3.07)	24 (0.94)	-
SB-QK2-0107MG*	G3/4	-	G1	G1/4	-	90 (3.54)	70 (2.76)	68 (2.68)	-	24 (0.94)	-
SB-QL3-0107XYMG*	G3/4	-	G1	G1/4	X-G1/4	100 (3.94)	70 (2.76)	68 (2.68)	-	35 (1.38)	11 (0.43)

K2 - M27x2

Dimensions in millimeters (inches)

Body for 3-Way SIC Valve

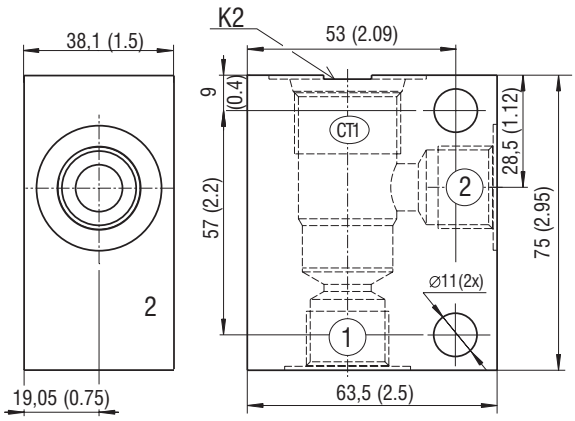

Model K2	Connecting port
	1, 2
SB-K2-0105*	G1/2
SB-K2-0106*	SAE10, 7/8-14

K3 - M27x2

Dimensions in millimeters (inches)

Body for 3-Way SIC Valve

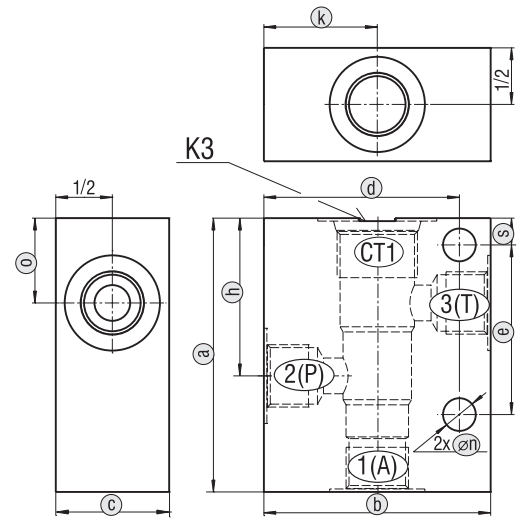

Dimensions in mm (in)	a	b	c	d	e	s	o	h	k	n
SB-K3-0105* SB-K3-0106*	92 (3.62)	76,2 (3.00)	38 (1.49)	65,7 (2.59)	57 (2.24)	9 (0.35)	28,5 (1.12)	53 (2.09)	38,1 (1.50)	10 (0.39)
SB-K3-0111*	105 (4.13)	80 (3.15)	45 (1.77)	70 (2.76)	85 (3.35)	10 (0.39)	54 (2.13)	24 (0.94)	35 (1.38)	11 (0.43)

Model K3	Connecting port	
	1, 2 (A, P)	3 (T)
SB-K3-0105*	G1/2	G1/2
SB-K3-0106*	SAE10, 7/8-14	SAE10, 7/8-14
SB-K3-0111*	G3/4	G1/2

RB2 - M30x1.5

Dimensions in millimeters (inches)

Valve VPN1-20/S plug in **Y** port
Valve VPN1-20/SY **without** a the plug in the **Y** port

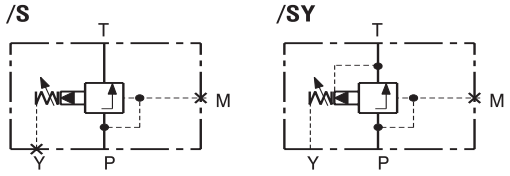

Model **RB2**	Connecting ports		
	P, T	Y	M
SB-RB2-0109XYMST-B	G1	G1/4	G1/4

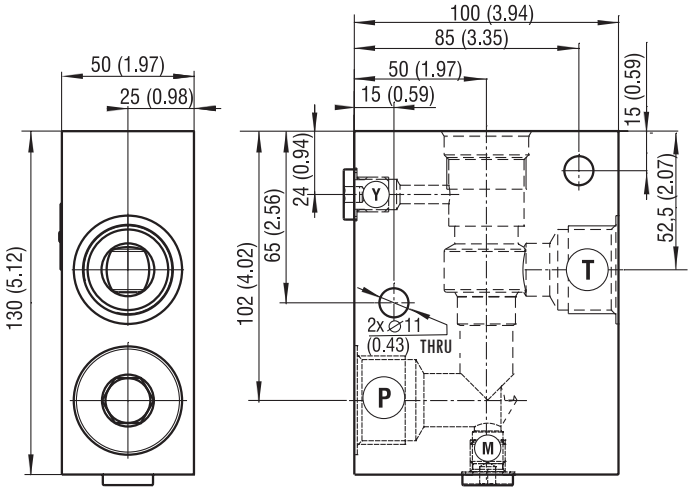

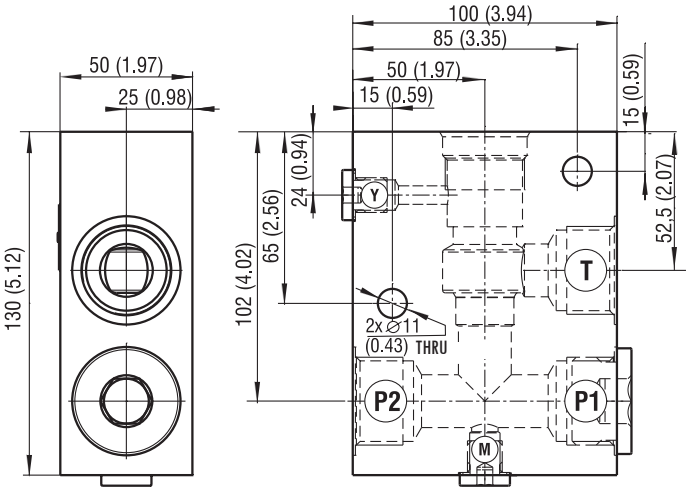

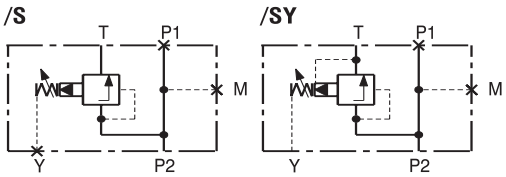

Model **RB2**	Connecting ports		
	P1, P2, T	Y	M
SB-RB2-0109PXYMST-B	G1	G1/4	G1/4

RB3 - M30x1.5

Dimensions in millimeters (inches)

Valve VPN1-20/SX **without** plugs in the X,**Y** ports

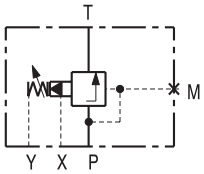

Model **RB3**	Connecting ports		
	P, T	X, Y	M
SB-RB3-0109XYMST-B	G1	G1/4	G1/4

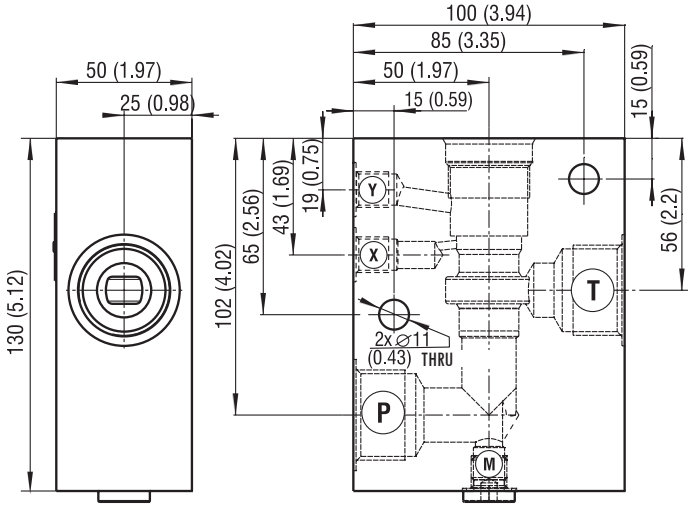

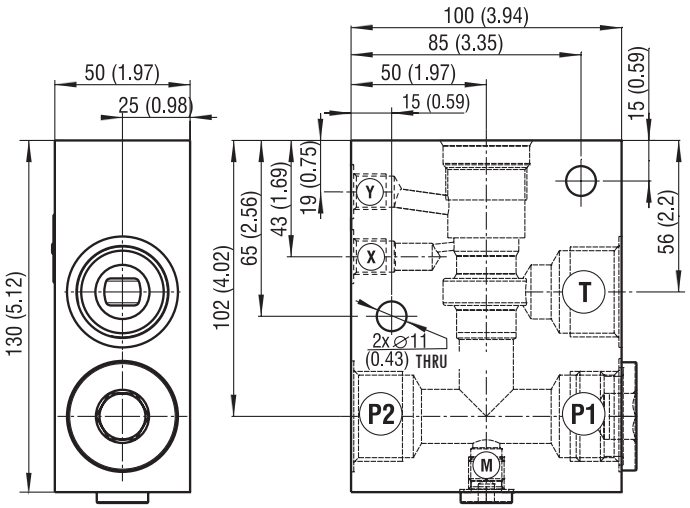

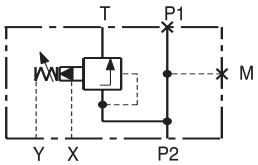

Model **RB3**	Connecting ports		
	P1, P2, T	X, Y	M
SB-RB3-0109PXYMST-B	G1	G1/4	G1/4

Body for 4-Way SIC Valve

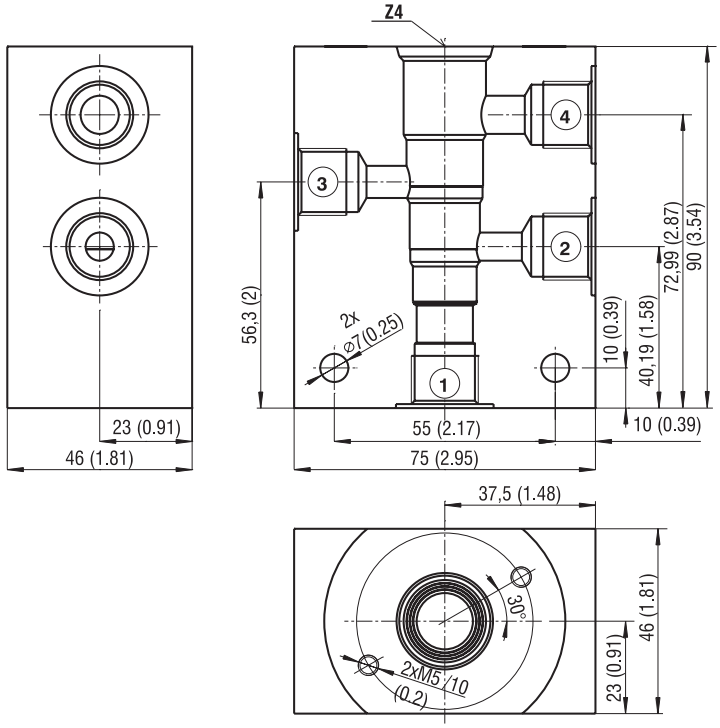

Model Z4	Connecting port
	1, 2, 3, 4
SB-Z4-0103AL	G3/8